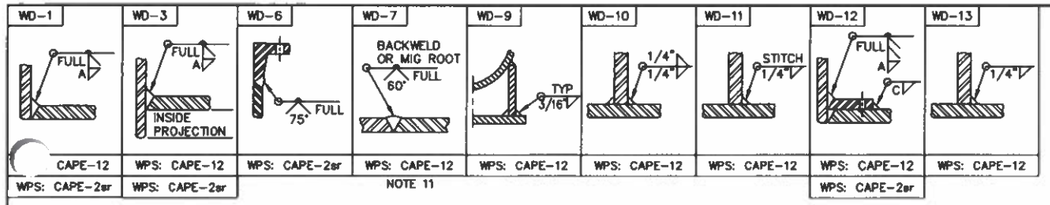

STANDARD TOLERANCES
FABRICATION:
GENERAL DEVIATION: ± 1/8"
OVERALL LENGTH: ± 1/4"
ANGULAR: ± 1°
WELD PREPARATION:
LAND: 1/16" ± 1/32"
ROOT GAP: 1/8" ± 1/16"
ANGULAR: ± 15°

Issued For Construction

Issued to Fab. Manager VC Jan 12 2021

Released for Fabrication DG Jan. 12, 2021

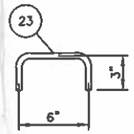

MANWAY HANDLE DETAIL

CONNECTION SCHEDULE

MARK	QTY	SIZE	SCH	CLASS & TYPE	SERVICE	MINIMUM PROJECTION INSIDE	MINIMUM PROJECTION OUTSIDE	WELD SIZE A	WELD SIZE B	WELD SIZE C	WELD DETAIL	BOM ITEM NO.
N1	1	12"	2.28"	300 RF HB	INLET	1"	6"	3/8"	–	–	3	5
N2	1	12"	2.28"	300 RF HB	GAS OUTLET	1"	6"	3/8"	–	–	3	5
N3	1	6"	1.81"	300 RF HB	HC OUTLET	–	6"	3/8"	–	–	1	6
N4	1	6"	1.81"	300 RF HB	WATER OUTLET	–	6"	3/8"	–	–	1	6
N5	1	3"	1.24"	300 RF HB	LSHH	–	6"	3/8"	–	–	1	7
N6	1	3"	1.24"	300 RF HB	PSV	–	6"	3/8"	–	–	1	8
N7ABC	3	2"	160	300 RFWN	WATER LG	–	6"	3/8"	–	–	1, 6	9, 11
N8A	1	2"	160	300 RFWN	HC LG	–	6"	3/8"	–	–	1, 6	9, 11
N8B	1	2"	160	300 RFWN	HC LG	G.F.	6"	3/8"	–	–	1, 6	9, 11
N9	1	2"	160	300 RFWN	PI	–	6"	3/8"	–	–	1, 6	9, 11
N10	1	2"	160	300 RFWN	TI	–	6"	3/8"	–	–	1, 6	9, 11
N11	1	3"	1.24"	300 RF HB	WATER LC	–	6"	3/8"	–	–	1	8
N12	1	3"	1.24"	300 RF HB	HC LC	–	6"	3/8"	–	–	1	8
N13AB	2	2"	160	300 RFWN	FLUSH	7"	6"	3/8"	–	–	1, 6	9, 10, 13
N14AB	2	3"	1.24"	300 RF HB	DRAIN	G.F.	6"	3/8"	–	–	1	8
M1	1	20"	2.50"	300 RF HB	MANWAY	2 7/8"	AS SHOWN	3/8"	–	–	3	4, 14, 15, 16

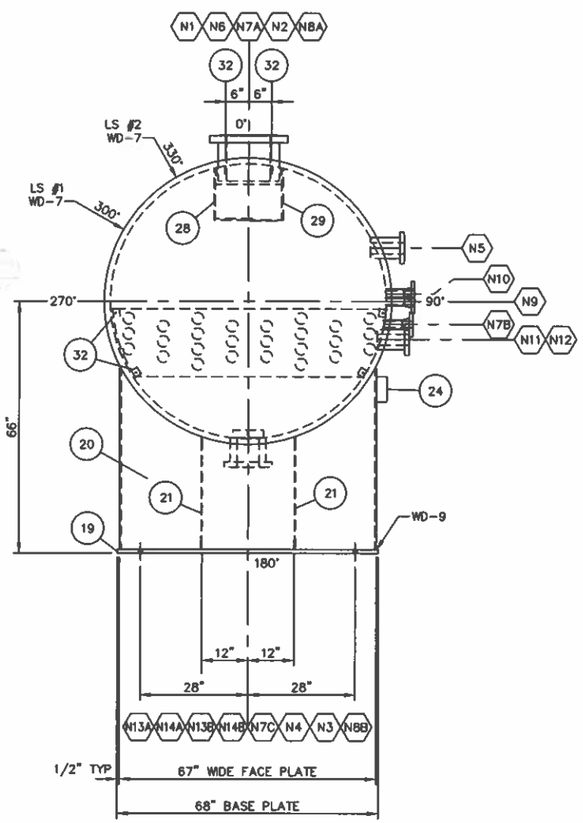

ORIENTATION VIEW A-A

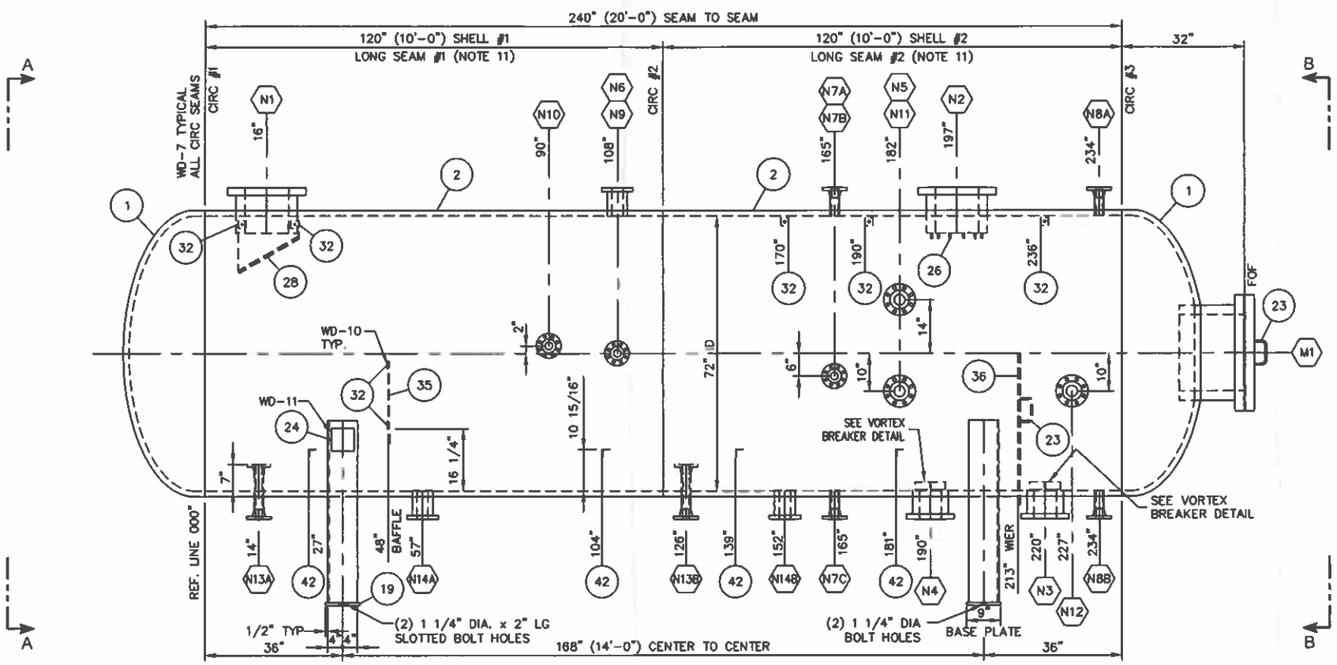

ELEVATION VIEW

DESIGN NOTES

DESIGN & FABRICATE TO: ASME SECTION VIII, DIVISION 1, 2019 EDITION
MAXIMUM ALLOWABLE WORKING PRESSURE (MAWP): 720 PSIG
DESIGN TEMPERATURE: 100° F
MINIMUM DESIGN METAL TEMPERATURE (MDMT): -20° F AT 720 PSIG
IMPACT TESTS: THE HEAD & SHELL MATERIAL SHALL BE IMPACT TESTED PER UG-84d AT -20° F. THE AVERAGE IMPACT ENERGY SHALL BE 15 FT-LBS (10 FT-LBS MIN). VESSEL (PRODUCTION) IMPACT TESTS OF CATEGORY A AND B WELDS IN THIS MATERIAL ARE REQUIRED PER UG-84i AT -20° F. THE AVERAGE IMPACT ENERGY SHALL BE 15 FT-LBS (10 FT-LBS MIN). ALL OTHER MATERIALS ARE EXEMPT PER UG-20f 1-5, UCS-66b1b, STUDS PER FIG UCS-66 (NOTE C)
RADIOGRAPHY: FULL PER UW-11a (RT-1)
PREHEAT: 200°F
PWHT PER UCS-56: YES, 1125°F ±25°F FOR 90 MINUTES MINIMUM
HYDROSTATIC TEST PRESSURE: 1080 PSIG
CORROSION ALLOWANCE: 1/8"
WEIGHT EMPTY: 36,500 LBS
WEIGHT FULL OF WATER: 76,000 LBS

GENERAL NOTES

1. QUALITY CONTROL PROGRAM NUMBER: AQP-1529
2. WELDING PROCEDURE REGISTRATION NUMBER: WP-3326.2
3. CAPACITY: 632 FT3
4. SERVICE: HYDROCARBONS
5. EXPOSED INSIDE OR OUTSIDE EDGES OF NOZZLES OR OPENINGS SHALL HAVE AN 1/8" MINIMUM RADIUS.
6. SURFACE PREPARATION: HAND TOOL CLEAN (MINIMUM)
7. PRIME AND PAINT: AS PER CLIENT SPECIFICATIONS
8. ALL BOLT HOLES TO STRADDLE CENTERLINES.
9. CLEAN AND COVER ALL OPENINGS FOR SHIPMENT.
10. USE WELDING PROCEDURE (CAPE-12) FOR ALL TACK WELDS.
11. LONG SEAMS TO BE WELDED IN 30° POSITION.
12. A/SA-105 FORGED FLANGES SHALL BE PRODUCED TO FINE GRAIN PRACTICE AND NORMALIZED, NORMALIZED AND TEMPERED, OR QUENCHED AND TEMPERED AFTER FORGING.
13. CRN DRAWING: 3746-01 REV 7 SHEETS 1, 2, 3 CRN: V7839.213
    CRN CALCULATIONS: 72-2-0720-3746-1-R8
    72-2-0720-3746-2-R8
    72-2-0720-3746-3-R8
14. S/N: V-201430

REV	DATE	REVISION	BY	APP
0	21-01-11	ISSUED FOR CONSTRUCTION	KG	VC

CAPE MANUFACTURING LTD.
PO BOX# 216 HALKIRK, AB T0C 1M0
TELEPHONE: (403) 884-2442

CLIENT:	STOCK	3 PHASE SEPARATOR 72" ID x 20'-0" S/S 720 PSIG @ -20°F/100°F	
DATE:	20-01-07		
JOB NO:	CML-201430		
DRAWN BY:	KG		
CHECKED BY:		DWG NO: SHEET 1 OF 2 CML-201430V	REV 0
APP BY:			